Filter cassette
Circular/rectangular/square ducts

Operation and Maintenance Instructions

GB

Document in original language | · A001

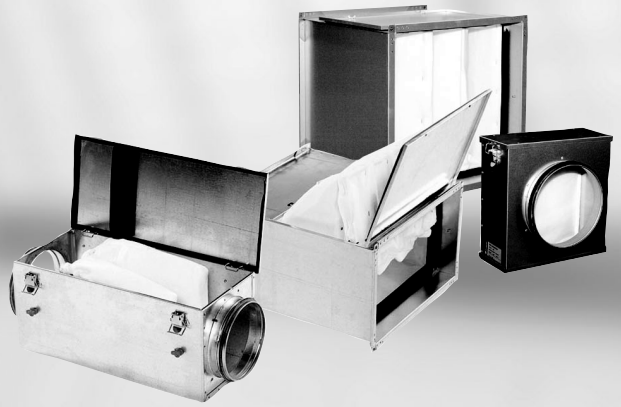

systemair

© Copyright Systemair AB
All rights reserved
E&OE

Systemair AB reserves the rights to alter their products without notice.
This also applies to products already ordered, as long as it does not affect the previously agreed specifications.

Contents

1 Filter cassette 1
1.1 Filter change 1
1.2 For circular ducts 1
1.2.1 FFR 1
1.2.2 FGR 2
1.3 For rectangular/square ducts 3
1.3.1 FFK 3
1.3.2 FFS 4

systemair

1 Filter cassette

1.1 Filter change

Filter used in cassettes described below needs to be changed regularly, how often depends of how the product is used and in what environment the filter cassette is located.

1.2 For circular ducts

1.2.1 FFR

FFR filter cassette is designed for bag filter of G3, M5, F7 standard filter types. The cassette is manufactured from galvanized sheet steel with rubber-sealed circular connections and locks with toggle fasteners.

Filter is ordered separately.

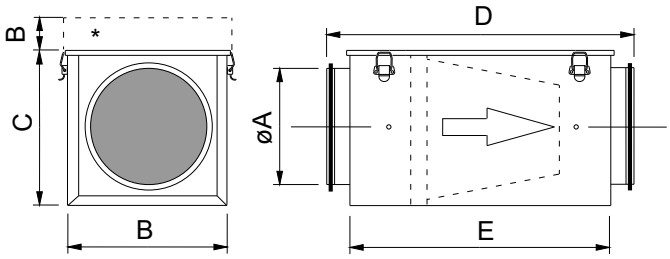

* Free area for filter change

A	B	C	D	E
100	200	203	522	450
125	200	203	522	450
150	200	203	522	450
160	200	203	522	450
200	245	248	530	450
250	295	298	584	500
315	345	348	634	550
355	445	448	780	650
400	445	448	782	650

1.2.2 FGR

FGR filter cassette is fitted with standard type G3 panel filter. The cassette housing is manufactured from galvanized sheet steel with rubber sealed circular connections, toggle locks and disposable filters.

Replacement filters are sold in packages of five.

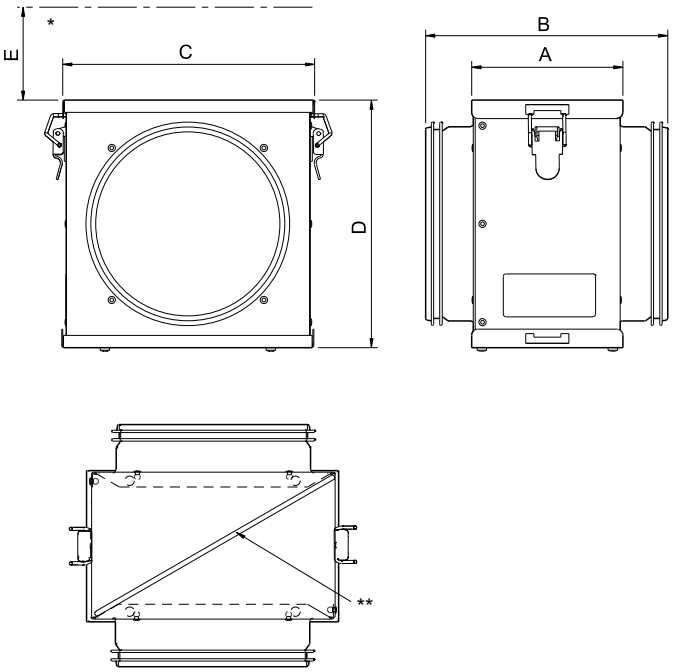

* Free area for filter change
** Filter mounting

FGR	ø	A	B	C	D	E
100	100	123	199	205	201	190
125	125	123	199	205	201	190
150	150	123	199	205	201	190
160	160	123	199	205	201	190
200	200	123	199	302	297	280
250	250	123	239	302	297	280
315	315	123	239	350	345	330
355	355	123	239	454	450	435
400	400	123	259	454	450	435

1.3 For rectangular/square ducts

1.3.1 FFK

FFK filter cassette is designed for bag filter G3 and F7 standard filter types. The cassette filter housing is manufactured from galvanized sheet steel with a hinged cover underneath fitted with a quick release latch.

Note:

The cassette can be connected directly on the duct and should always be fitted in a flat or vertical position. If fitted vertically, the direction of the airflow must be downwards so that the filter bags do not collapse.

Filter is ordered separately.

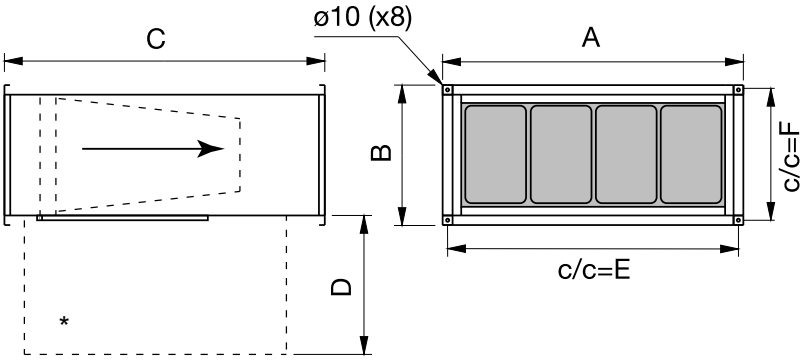

* Free area for filter change

FFK	A	B	C	D	E	F
30–15	340	190	402	250	320	170
40–20	440	240	502	350	420	220
50–25	540	290	532	350	520	270
50–30	540	340	562	350	520	320
60–30	640	340	642	350	620	320
60–35	640	390	717	350	620	370
70–40	740	440	787	420	720	420
80–50	840	540	882	530	820	520
100–50	1040	540	882	530	1020	520

1.3.2 FFS

FFS is fitted with a standard type M5 bag filter. The cassette is manufactured from galvanized steel sheet with a hinged cover underneath and fitted with a quick release latch for easy filter change.

It can be connected directly to the duct.

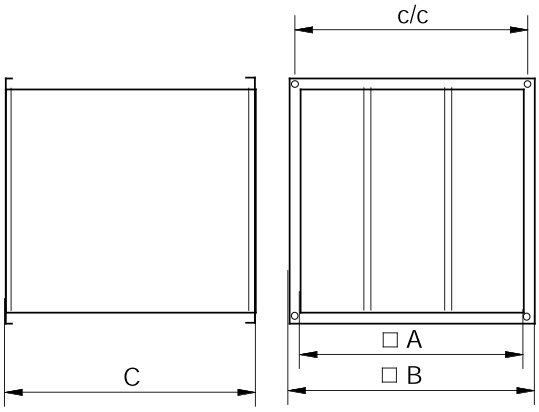

FFS	□A	c/c	□B	C
45	447	470	492	502
50	502	520	547	532
55	550	573	595	562
65	661	680	707	642
70	697	720	742	642

Systemair Sverige AB
Industrivägen 3
SE-739 30 Skinnskatteberg, Sweden

Phone +46 222 440 00
Fax +46 222 440 99

www.systemair.com

Filter cassette · Operation and Maintenance Instructions · · en_GB · 17-11-2017 · A001